reflex ces high tech for innovators

ACHILLES

Instant-DevKit
Arria® 10 SoC SoM IDK

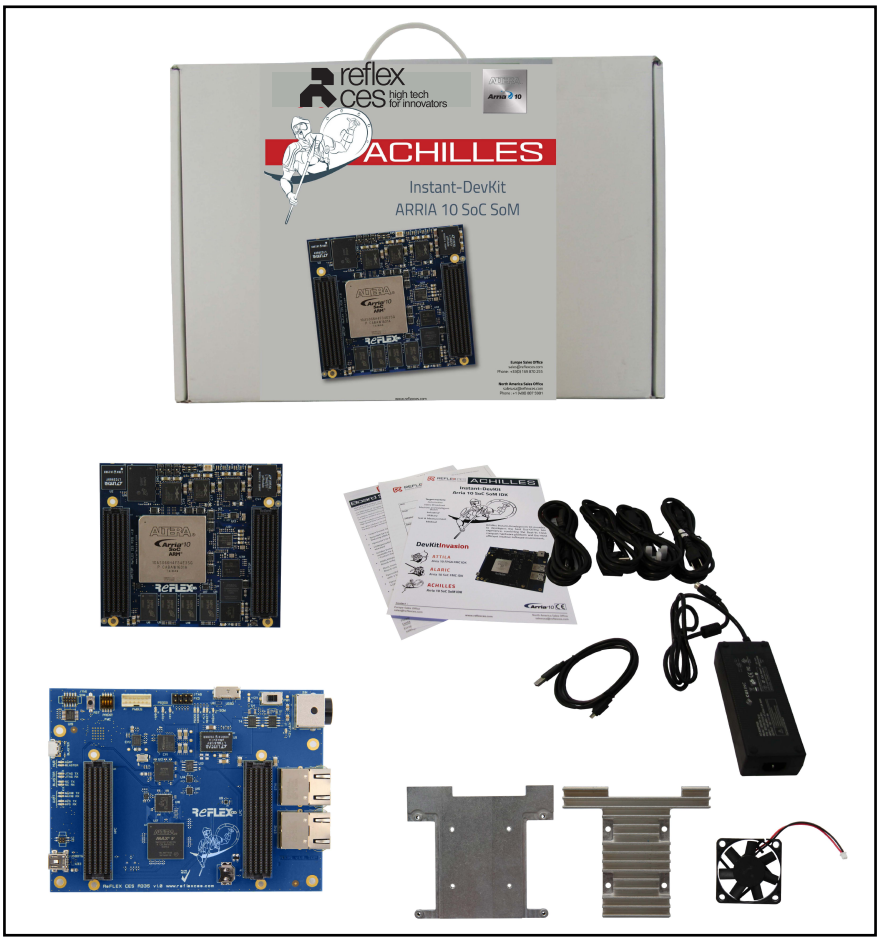

Achilles Instant-Development Kit provides to developers the best Out-Of-The box experience, combining the Best-In Class compact hardware platform and the most efficient intuitive software environment.

DevKitInvasion

ALARIC
Arria® 10 SoC FMC IDK

SARGON
Stratix® 10 FPGA FMC+ IDK

Target markets:

Medical
Military
Industrial
Automotive
Video Broadcast
Test & Measurement
Machine and Intelligent Vision

Arria® 10

Contact :

Europe Sales Office
sales@reflexces.com

www.reflexces.com

North America Sales Office
salesusa@reflexces.com

ACHILLES Instant-DevKit
Arria® 10 SoC SoM IDK

Configuration & Monitoring
- Onboard USB Blaster JTAG configuration circuitry to enable FPGA and MAX10 configuration over USB connector.
- µUSB connector interfacing UART bus, MAX® 10 and the HPS FPGA.
- Connector for connecting a Linear Powerplay DC1613A USB cable
- PMBus interface : Digital Power System management is ready, configure and interrogate the PSM Devices with LTpowerPlay

Communication Interfaces
- 2x Ethernet 10/100/1000 Base-T (HPS)
- 1x I²C (HPS)
- 1x USB3.0 Micro B (FPGA)
- 1x USB OTG Mini AB (HPS)

Board size - 100mm (3.94 inches) x 140 mm (5.51 inches)

Power - Evaluation mode on desk with AC power supply

Standards and compliance - RoHS/REACH compliant, ISO9001

Kit Ordering information

Part number
- RXCA10S066PF34-IDK0SB with Achilles Indus v5

Version
- Development Kit (Starter board + Module)

Kit content
- Starter board with the Achilles Arria® 10 SoC module (+ heat spreader, heat sink and fan)
- Power supply and cables (US, UK, EU, JP), interface cables (USB, Ethernet)
- Module, Starter board, PCIe carrier board documentation (Reference Manual, Starter Guide)
- Starter board & PCIe carrier board schematics
- Carrier Design Guide
- Mechanical drawings PDF, 3D Step, Assembly files PDF
- HDL Test Designs (Quartus projects) by module version
- 10GbE RefDesign
- Kernel Linux & Linaro optimized distribution, U-boot bootloader, Test scripts
- Software design accessible online on rocketboards
- Online support at support.reflexces.com

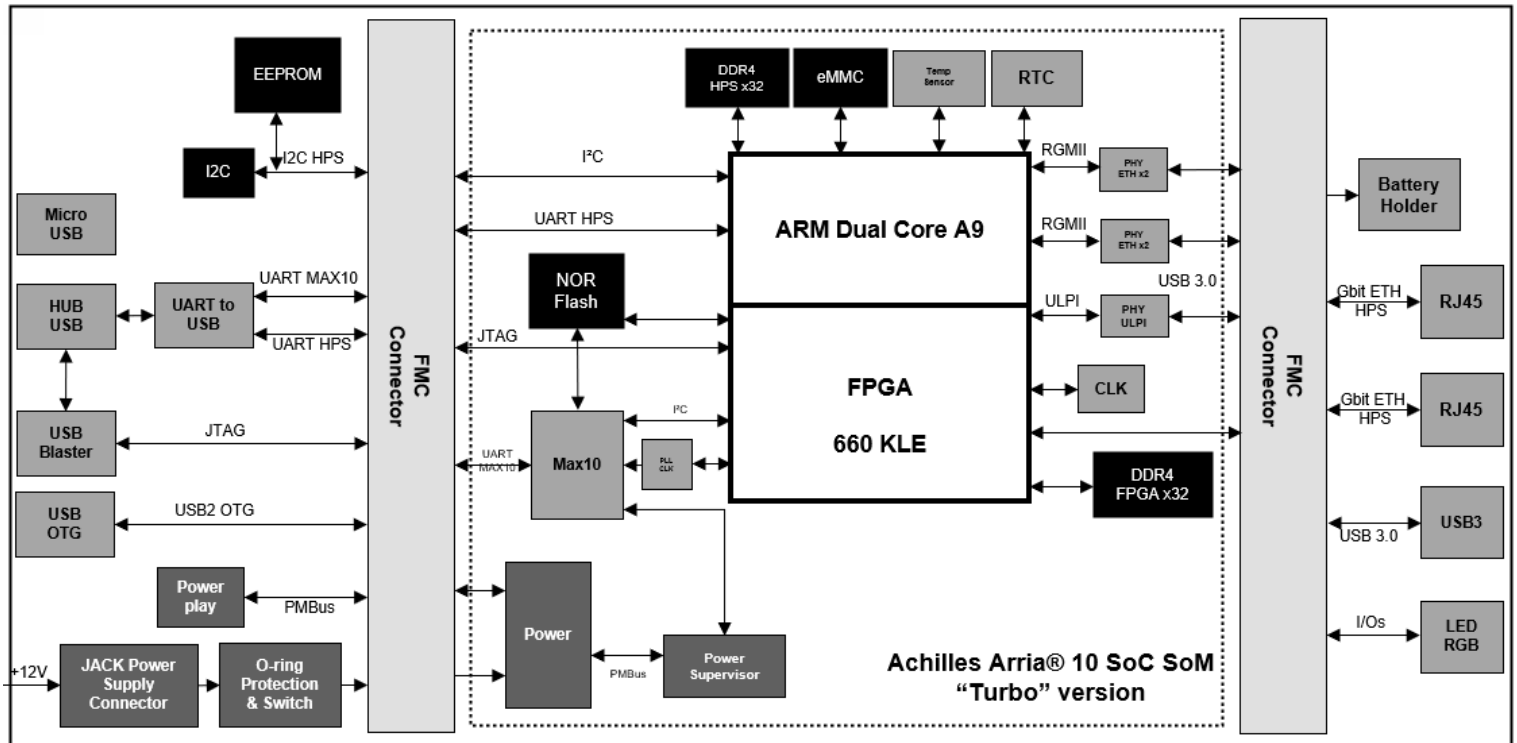

Starter Board of the Arria 10 SoC SoM

© reflex ces 2026-All Rights Reserved– April/v4.7